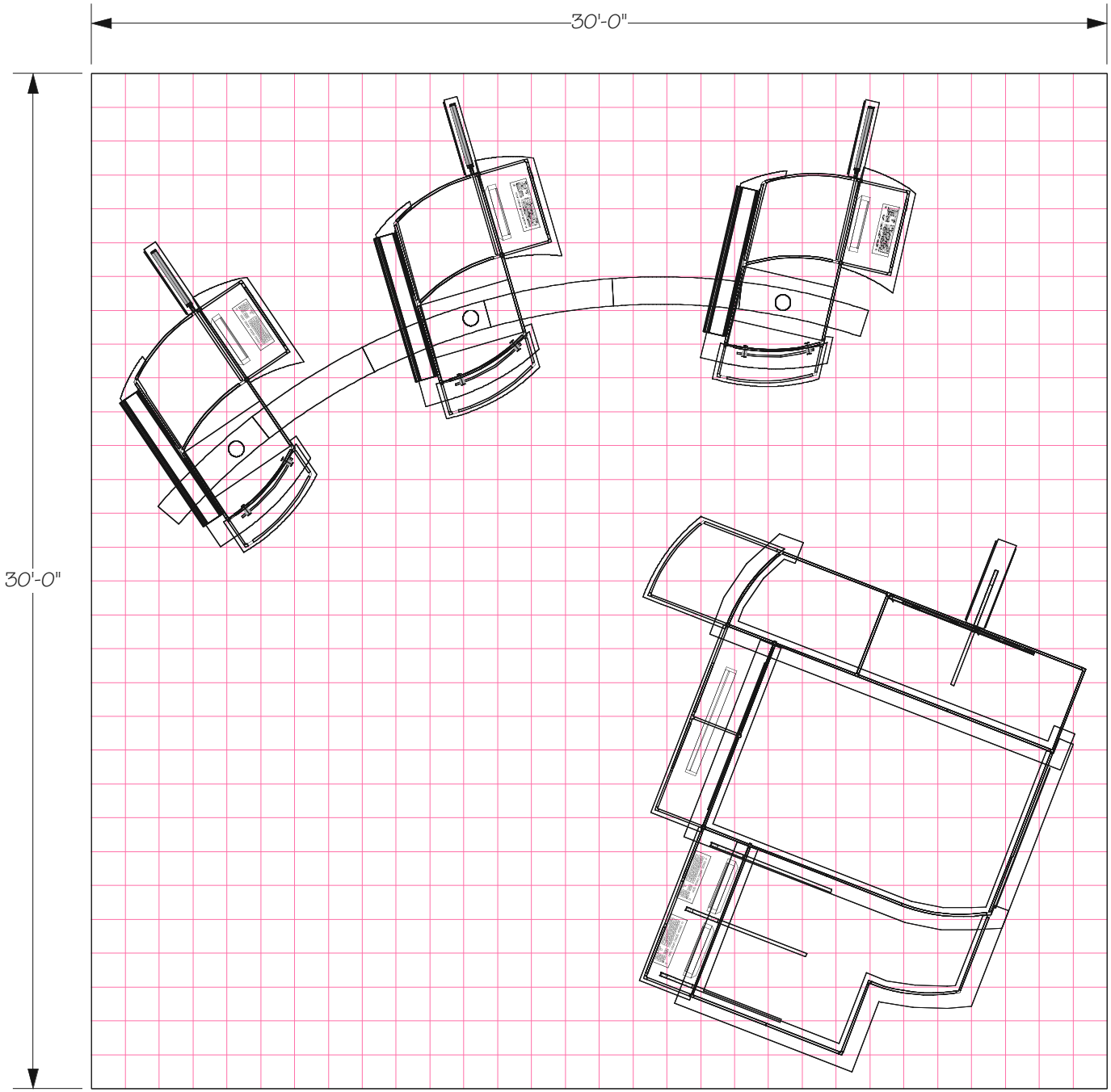
30'-0"
30'-0"